REVISION RECORD

ECN NO.	CUSTOMER REV.	AAVID REV.	DATE
11779	C	--A	2/12/01
1866	C	--B	1/6/04
2000	C	--C	8/13/04

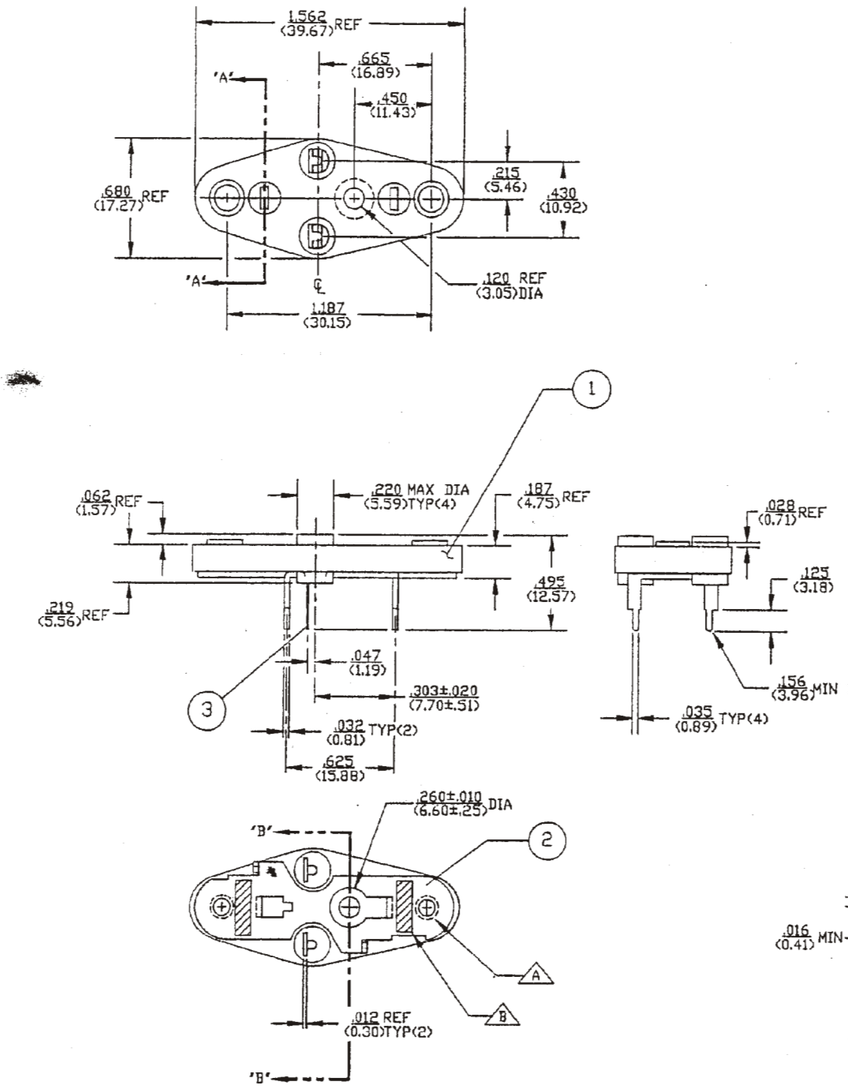

PART TABLE

	ITEM	DESCRIPTION	MAT'L	QTY.
035119	1	BODY (15116-1)	SEE	1
035122	2	COLLECTOR PLATE (15979-2)	NOTE	1
035123	3	CONTACTS (15980)	7	2

NOTES:

1. D.C. CURRENT RATING: 10 AMPS CONTINUOUS DUTY - 15 AMPS PEAK.
2. CONTACT RESISTANCE: AFTER 3 INSERTIONS OF A $\frac{.043\pm.0001}{(1.092\pm.002)}$ DIA PIN CONTACT RESISTANCE WITH A $\frac{.038\pm.0001}{(.965\pm.002)}$ DIA PIN INSERTED SHALL NOT EXCEED .0075 OHMS AT 5 AMPS.
3. INSERTION FORCE: THE FORCE REQUIRED TO INSERT A $\frac{.043\pm.0001}{(1.092\pm.002)}$ DIA PIN SHALL NOT EXCEED 5 LBS
4. CONTACT RETENTION: AFTER 3 INSERTIONS OF A $\frac{.043\pm.0001}{(1.092\pm.002)}$ DIA PIN, THE CONTACT MUST BE ABLE TO RETAIN A 3 OUNCE PIN OF $\frac{.038\pm.0001}{(.965\pm.002)}$ DIA.
5. TEST PINS: SHALL BE OF HARDENED STEEL WITH CHAMFERED TIP.

6 MATERIAL:

ITEM NO 1. BODY: THERMOPLASTIC POLYESTER 30% GLASS FILLED PER MIL-M-24519 TYPE GPT-30F WITH U.L. TEMPERATURE INDEX OF 130°C OR BETTER AND FLAMMABILITY RATING 94 V-0.
COLOR - BLACK (15116-1) FOR 6-32 UNC-2B THREADS
GREY (15116-3) FOR M3 x 0.5-6H THREADS

ITEM NO. 2. COLLECTOR PLATE: BRASS WITH TIN PLATE.

ITEM NO. 3. CONTACTS: PHOSPHOROUS BRONZE .012(.30) THICK WITH TIN PLATE.

7 CONTACTS ARE FREE FLOATING IN BODY, POSITIONAL TOLERANCE ±.016(.41) DOES NOT INCLUDE FLOAT.

8. PART MARKING: PART NO. 16357-1 WAS ORIGINALLY PART MARKED WITH PART MARK '113 P 10020' PRIOR TO A CATALOG NUMBER (8118 PF 303) BEING ASSIGNED.

035127

LEVEL	REVISION RECORD	DATE	ECN	DRAWN	CHECKED
C	ADD -3 PART	3/19/92	901777	C.H.D.	DLB

PROPRIETARY INFORMATION
THIS DOCUMENT CONTAINS PROPRIETARY AND/OR PATENT INFORMATION AND IS NOT TO BE REPRODUCED IN WHOLE OR PART WITHOUT WRITTEN AUTHORIZATION BY THERMALLOY, INC., EXCEPT PREPARING SOURCING INFORMATION SPECIFICATIONS FOR THERMALLOY, INC. PRODUCTS.

DRAWN: J.RUVANG DATE: 7/2/82
CHECKED: D.BLAND DATE: 7/2/82
APPROVED: D.BLAND DATE: 7/2/82

TOLERANCES: ±.016(.41)±1/7 EXCEPT AS NOTED
MATERIAL: SEE NOTE 6
CODE IDENTIFICATION NUMBER 13103

NOTE: METRIC DIMENSIONS ARE IN PARENTHESES AND ARE EXPRESSED IN MILLIMETERS.

Thermalloy Inc.

TITLE: SOCKET, TO-3 POWER (SOLDERABLE)
SCALE 2:1
ORIGINATING ECN 6408
SIZE C
DRAWING NUMBER THM,16357-2
REVISION C